WARNING: ANY ADJUSTMENTS OR MAINTENANCE ON THE ALTERNATOR/ VOLTAGE REGULATOR SYSTEM MUST NOT ALLOW THE FIELD CIRCUIT TO OPEN WHILE THE ALTERNATOR IS RUNNING AS AN UNREGULATED FIELD CIRCUIT WILL CAUSE THE ALTERNATOR VOLTAGE TO RISE TO MANY TIMES THE NOMINAL VALUE AND CAUSE OTHER ELECTRICAL FAILURES.

Boat Ground System - The negative connection of each engine's alternator, starter, and the negative terminal of the battery are all connected together at the engines, as well as a heavy wire jumper tying both engines together. In addition, all under water metal surfaces, through hull fittings, and internal tanks are bonded to the same negative common ground connection. This bonding system reduces the possibility of a static charge spark initiating an explosion. All owner installed DC electrical equipment must be grounded to the electric ground and not to the bond system.

WARNING: ANY POSITIVE WIRE CAN CAUSE A SHORT CIRCUIT WHEN IT CONTACTS THE GROUND OR BOND SYSTEM ACCIDENTALLY AND THE RESULTANT SPARK MAY IGNITE AN EXPLOSIVE MIXTURE, IF PRESENT.

The boats ground system provides another feature in that it is connected to zinc anodes located below the water line at the transom. The zinc material makes the ground system on the boat approximately one-half volt positive with respect to any other nearby metal poles, steel reinforced concrete piles and other metals below the water line. The zinc acts as one side of a

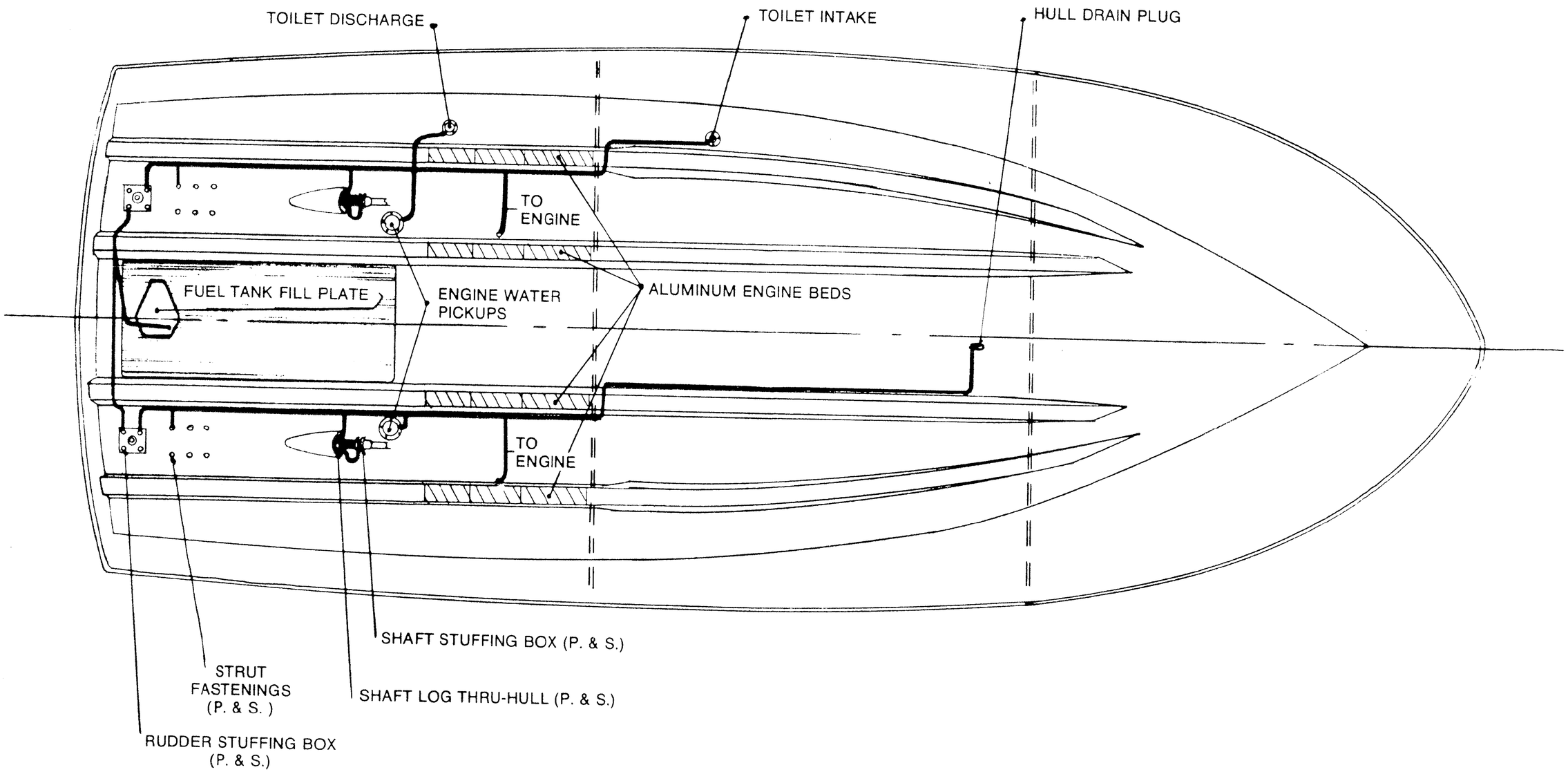

THRU HULL BONDING SYSTEM – 30′ TOURN. FISHERMAN

(ILLUS. #4)

primary battery, of which the other material is the above noted submerged metals, both being made active by the electrolyte in which the boat is floating. Since zinc is less noble than the other metals, it sacrifices itself to maintain the protection that it gives to its ground system until the zinc plates are exhausted.

WARNING: ZINC PLATES MUST BE REPLACED WHEN THEY BECOME SPONGY AND LOSE THEIR METALLIC FEEL AND STRENGTH. SPONGY ZINCS ARE THE RESIDUE OF IMPURITIES THAT WERE IN THE ORIGINAL CASTINGS, AND DO NOT PROVIDE FULL PROTECTION TO THE BOAT SURFACES. REPLACEMENT OF ZINCS CANNOT BE SCHEDULED ON A TIME BASIS AS IT DEPENDS ON THE ACTIVITY OF ADJACENT METALLIC STRUCTURES AND THE SALINITY OF THE WATER ELECTROLYTE. IT IS BEST TO CHECK THE ZINCS FOR DETERIORATION VISUALLY ONCE A MONTH, OR ELSE ELECTRICALLY, WITH AN ELECTRONIC TYPE VOLTMETER, WHICH SHOULD READ APPROXIMATELY ONE-HALF VOLT DC, WHEN THE PROBE IS HELD IN THE WATER NEAR (NOT ON) THE ZINC AND THE OTHER PROBE GROUNDED TO METAL ON SHORE. VALUES OF ONE-QUARTER VOLT OR LESS INDICATE END OF ZINC PROTECTION.

The boat ground system has also the grounding conductor of the AC system connected at the engine ground. This is the third or green conductor of the 115 volt AC system which makes the cases and frames of AC devices shockproof in case of an internal ground fault in the electrical wiring of the device. Any owner installing AC electrical equipment must be sure it is grounded in the same way.

The electrical ground system is designed to always carry electrical current and the bond system is designed to always provide a

ground reference to eliminate static charges and only in emergency to clear a ground fault.

Trouble-shooting the Boat Ground System - The common ground connections at the engine should be inspected visually at regular intervals for cleanliness and tightness of the pressure screw connections as heat, vibration and time cause the copper conductors to loosen under pressure. Bolted connections in the system should likewise be checked for tightness and cleanliness. Twice a year it is recommended that a resistance check be made between the zinc connection plate and the engine connection in order to insure the correct operation of the zinc protection system. The value of the resistance must not be more than 0.25 ohms on an electronic tester. Any higher reading must be resolved by correcting the faulty connection in the system.

The AC ground system may be checked with either an electronic voltmeter or a commercially available tester that checks for most of the combinations of connections and suggested means of correcting same. The safety of using alternating current devices depends on preserving the integrity of the AC ground system.

DC Electrical System Distribution Locker - The power to operate the DC Electrical System Distribution Locker is supplied from each of the boats' batteries through the Battery Disconnect Switch

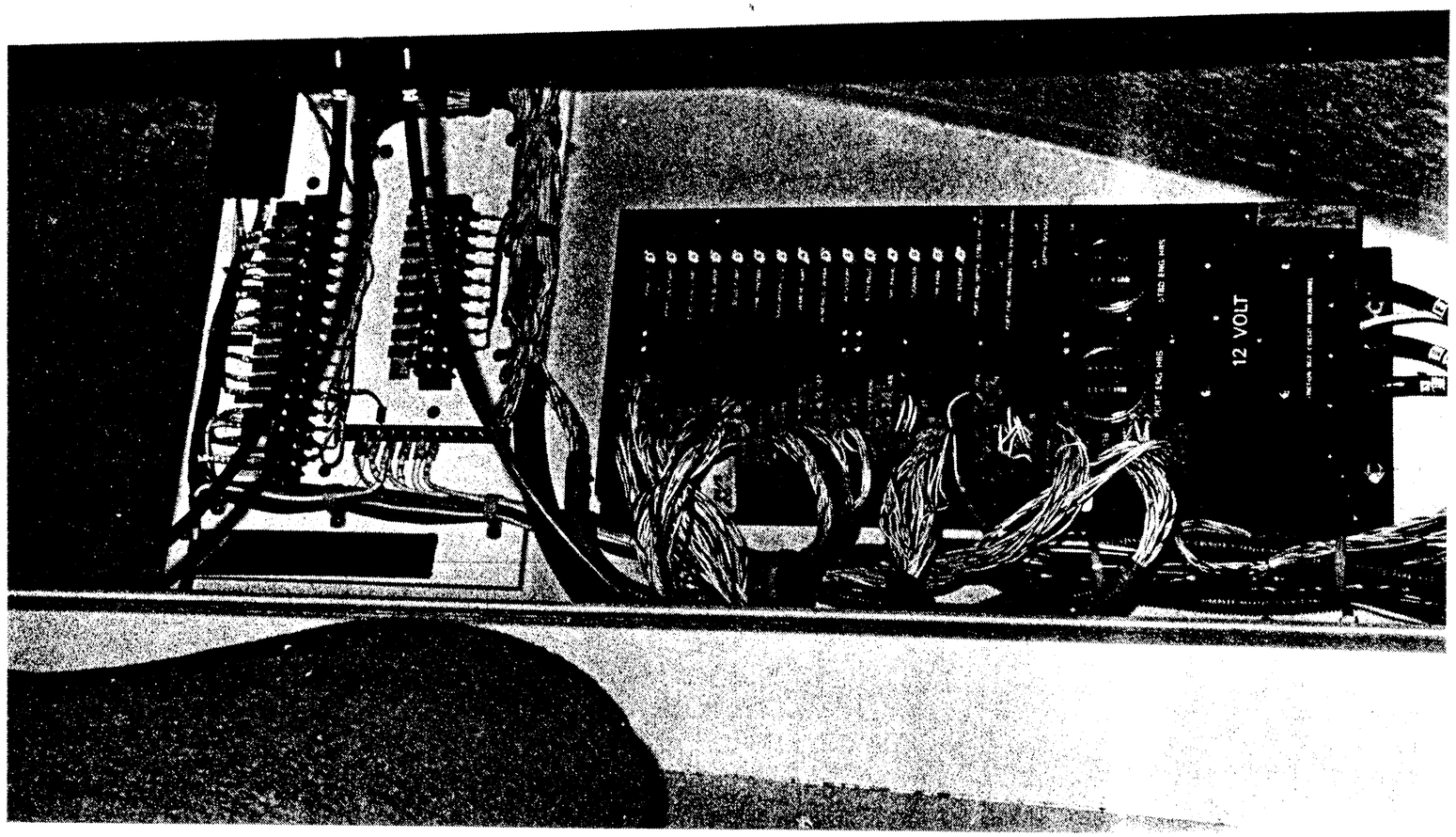

D.C. DISTRIBUTION LOCKER
HULL MFA 30-0001 THROUGH MFA 30-0031
(PIC. #8)

D.C. DISTRIBUTION LOCKER
HULL MFA 30-0032 & UP
(PIC. #9)

which are located adjacent to the respective battery. The DC locker has circuit breakers for every function or system on the boat.

Most of the circuit breakers, as noted below, are powered when the boat security control is locked in order to provide key functions such as anchor light and bilge pumps, and various other requirements.

PORT PANEL	STARBOARD PANELS
Key Switch	Key Switch
VHF Radio	Accessory
Indicating Depth Sounder	Loud Hailer - Horn
Bilge Blower Fan	Forward Bilge Pump
	Aft Bilge Pump
	Shower Pump
	Water Pressure Pump
	Toilet Pump
	Engine-Storage Lights
	Forward Lights
	Aft Lights

Some of the above functions are not used as they are for optional equipment, however, the circuit breakers are connected to the respective battery and are wired to the terminal strips at the rear of the DC Locker.

Two styles of circuit breakers are used. The reset only type is used in order to prevent inadvertent circuit disconnection, and the pull-push type is used to facilitate service or to program a

particular function.

Some of the circuit breakers are powered only when the security lock is turned on, as these are the circuit breakers that start and run the boat. The following circuit breakers are powered from the respective battery.

PORT PANEL	STARBOARD PANEL
Ignition-Start	Ignition - Start
Instruments	Instruments
Instrument Warning	Instrument Warning
Trim	Searchlight
Navigation Lights	Windshield Wiper
Fire Extinguishing System	

NOTE: Some of the above are optional equipment items.

The Port and Starboard 12 VDC Panels incorporate the Engine Hour Meters. These meters are for owner convenience in determining when preventive maintenance requires a check-up. The reading on the meter does not necessarily indicate the wear and tear on the engines as a Tournament Fisherman boat may have many hours of low rpm operation instead of the high rpm's of a cruiser type boat. Maintenance should also be scheduled on a calendar basis (as well as hours), since marine environment can cause more deterioration than the running hours may indicate.

Voltmeters are only supplied on the Engine Instrument Gauge assembly to provide constant readings to the pilot. No voltmeters

are needed at the DC Locker panels.

WARNING: THE CIRCUIT FUNCTIONS CONTAINED IN THE DC LOCKER ARE CRITICAL TO THE OPERATION OF THE BOAT SO, THEREFORE, IF ANY MALFUNCTIONS ARE SUSPECTED IN THIS UNIT, CONTACT YOUR CHRIS*CRAFT DEALER FOR SERVICE.

Access to the terminal strips behind the DC Locker is by removing the two screws at the top and bottom of the Locker Panel. You should provide a means of holding the panel when removed so that circuit breakers and meters are not damaged.

Trouble-shooting the DC Locker can be done by referring to the wiring diagram at the end of this section.

AC Electrical System - The AC Electrical System consists of (I) the inlet receptacle and associated controls located in the starboard motor box cockpit side panel; (II) the AC Electrical Locker, located in the Salon; (III) the AC generator located in the engine room; and (IV) the various AC electrical equipment located throughout the boat.

AC Inlet Receptacles - A 115 volt receptacle is provided for the inlet is capable of 30 amperes. A 30 ampere, three-conductor, 50 foot shore cable is provided for the receptacle to make proper connection to the shore; however, if a 30-ampere, 115 volt receptacle is not available at the shore, there are adapters

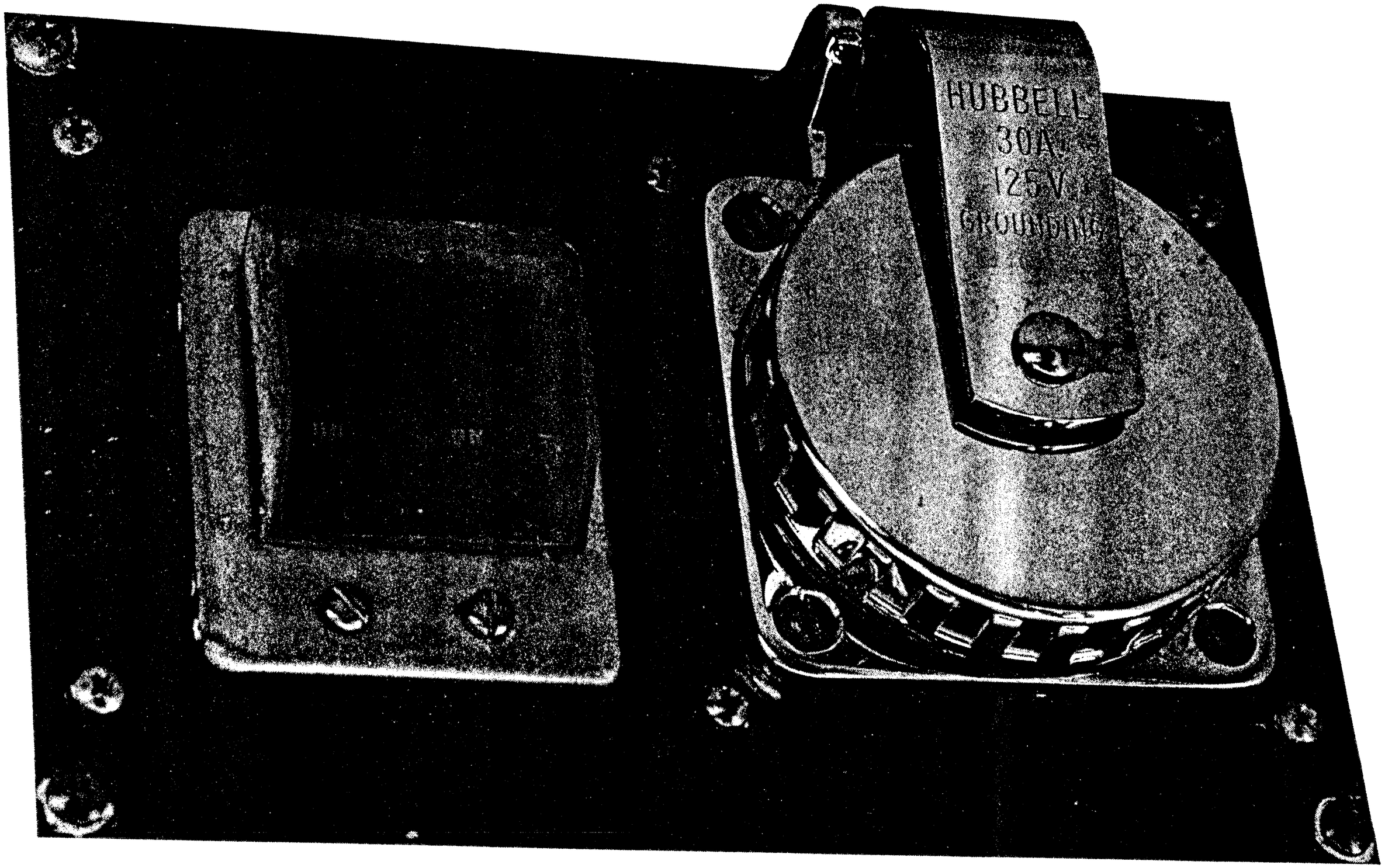

SHORE INLET RECEPTACLE
(PIC. #10)

provided in order to obtain power for the AC system.

1. If only a 115 volt, 15 ampere shore receptacle is available, then attach the proper adapter to the 30 ampere canister on the shore cable and connect to the shore receptacle. Boat Services will require scheduling in order of priority of use. All connections from the boat to the shore must be made before activating the shore circuit breakers.

2. After connection to the shore receptacle is made, then switch on the circuit breaker beside the boat receptacle.

Trouble-shooting the Inlet Receptacle area can be done by referring to the wiring diagram at the end of this section.

AC Distribution locker - The AC Locker is located in the forward section of the salon. The Locker consists of three panels identified from left to right.

WARNING: THE LOCKER MUST ONLY BE SERVICED BY QUALIFIED PERSONNEL BECAUSE OF THE HIGH VOLTAGES PRESENT DURING OPERATION.

A.C. DISTRIBUTION LOCKER

The AC Locker is located in the forward section of the salon.

The Locker consists of three panels identified left to right:

WARNING: THE LOCKER MUST ONLY BE SERVICED BY QUALIFIED PERSONNEL BECAUSE OF THE HIGH VOLTAGES PRESENT DURING OPERATION.

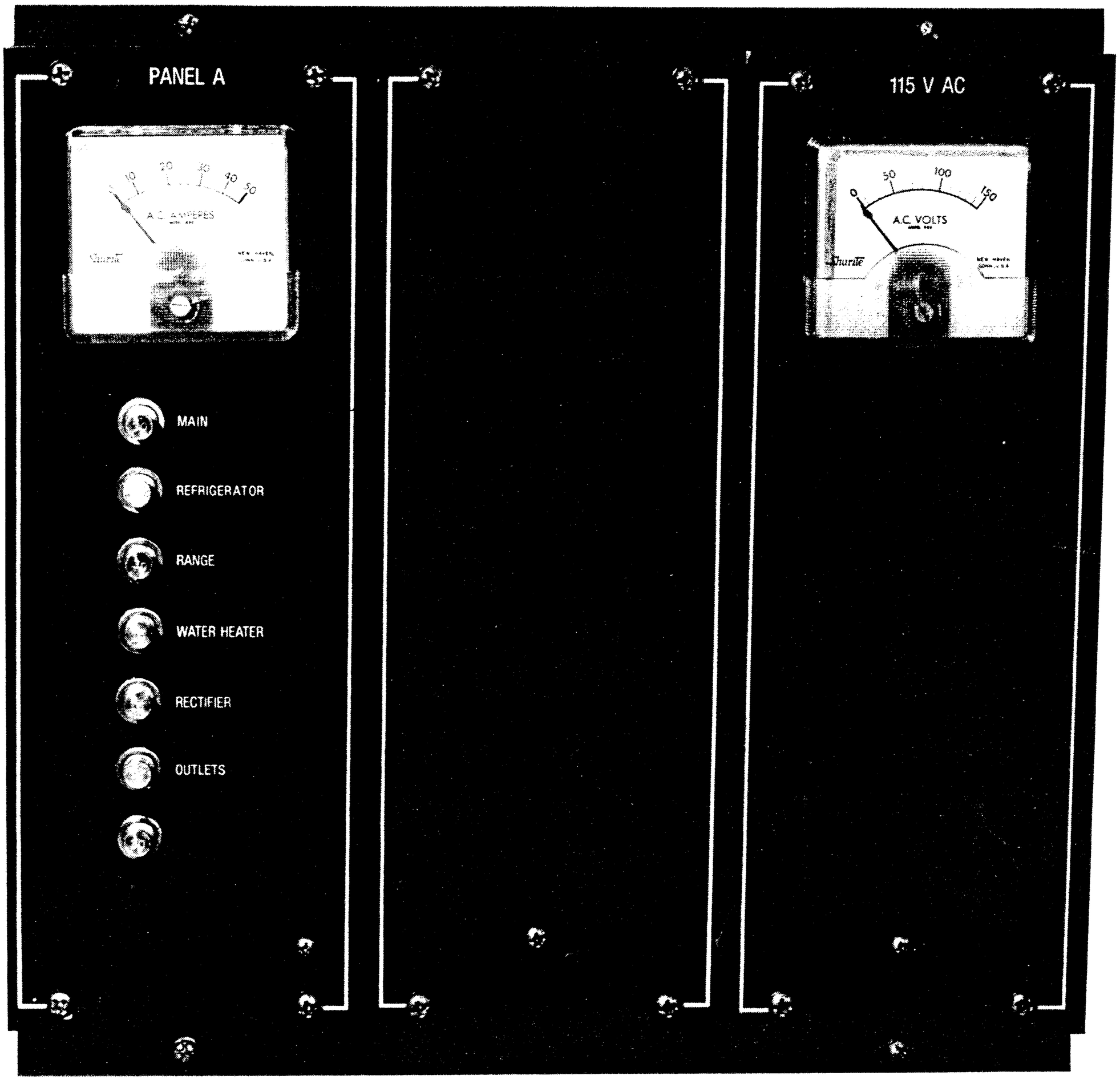

A.C. DISTRIBUTION LOCKER
(PIC. #11)

Functions are as follows:

- Panel A has an ammeter at its top which indicates the current drawn by the loads identified on this panel as well as the holding tank pump if installed. The Main Circuit Breaker in the panel protects the boat power feed from the inlet receptacle to the panel. The rest of the circuit breakers supply power to:

  Refrigerator
  Range
  Water Heater
  Rectifier
  Outlets - Forward
  Outlets - Gal/Sal
  Outlets - Aft
  Holding Tank

<u>NOTE</u>: Some functions may not be installed on the boat.

- 115V AC Panel has the voltmeter and also the voltmeter selector switch if more than one power source is supplied. This panel also incorporates the power selector switch for supplying the boat requirements from the second inlet and the generator if these items are installed.

- Panel B has an ammeter at its top which indicates the current drawn by the loads identified on this panel. The Main Circuit Breaker in the panel protects the boat power feed from the inlet receptacle to the panel. The rest of the circuit breakers supply

power to:

Air Conditioner
Air Conditioner - Aft
Heater - Salon
Heater - Aft

NOTE: Some functions may not be installed on the boat.

WARNING: THERE ARE DANGEROUS VOLTAGES PRESENT IN THE LOCKER DURING OPERATION AND SHOULD ONLY BE SERVICED BY AN EXPERIENCED SERVICE TECHNICIAN.

The terminations of the electrical circuits are located to the rear of the Locker. Access to the connection area is by removing the four screws at top and bottom of locker. Provide a means of holding the panel, when removed, in this position so that the circuit breakers and meters are not damaged.

Trouble-shooting the AC Locker can be done by referring to the wiring diagram at the end of this section.

The AC Generator (If Installed) - is located in the engine compartment area forward and between of the propulsion engines. Refer to the manufacturer's manual for operation and maintenance information. Fuel for operation of the engine is obtained from the same tank as the main engines. The electrical output of the generator is connected to the two pole Underwriters' Laboratories approved circuit breaker located adjacent to the Generator as required by the boat electrical code. This circuit breaker is rated slightly higher than the main circuit

breakers in the AC Locker, which is permitted by the Generator manufacturer, in order to prevent nuisance tripping of the Generator circuit breaker.

Starting and stopping the generator engine is normally done at the AC Locker, however, for service work, starting and stopping the engine may be done with the manual controls directly at the engine control box. Runnings hours of the Generator may be read at the AC Locker as well as the cautionary reminder to check oil level per manufacturer's manual. Consult the manufacturer's manual for complete description and operating instructions for the generator.

Problems of operation of the AC Generator must be corrected by competent service personnel. Contact the Generator representative directly or refer the request through your Chris*Craft dealer.

Regular inspection and servicing of the light plant is required as mentioned in the engine operation section.

WARNING: LOSS OF LIFE BY ASPHYXIATION HAS OCCURRED FROM OWNER NEGLIGENCE IN INSPECTING AND MAINTAINING THE GENERATOR EXHAUST SYSTEM. THIS SYSTEM CONTAINS SALT WATER AND IS SUBJECT TO CORROSION AND LEAKAGE.

Inspect the connections and metal parts for corrosion, telltale exhaust smoke, tightness, etc. Inspect hoses and clamps for wear, solid feel, insert screwdriver or wrench in hose clamp tightening

bolt to check proper take up. Inspect muffler for soft spots, loose fittings, as well as the thru-hull connection. Particularly check the exhaust elbow where it leaves the engine for erosion, or deterioration. This must be routine owner maintenance.

If Generator is to be operated overnight with persons on board, check the entire system for damage, leaks and odors before retiring.

A.C. ELECTRICAL EQUIPMENT

AC Electrical Equipment located in the various sections and areas of the boat is supplied for operation at 115 volts at a frequency of 60 Hertz. Generally, motor operation, such as the compressor motor in the refrigerator, can function satisfactorily at voltages ranging approximately eight per cent below and above the nominal, i.e., 105 to 125 volts. Lower or higher values of voltage can cause motor failure due to increased heating of the motor windings.

WARNING: IF SHORE POWER IS LOWER THAN 105 VOLTS, IT IS NECESSARY TO SHUT OFF ALL MOTOR DRIVEN APPLIANCES OR ELSE SELECT AND OPERATE THE AC GENERATOR POWER PLANT. LIGHTING AND HEATING DEVICES ARE NOT REQUIRED TO BE SHUT OFF AT LOW VOLTAGE, AS THEY WILL OPERATE WITH REDUCED OUTPUT.

The AC Electrical System is designed in accordance with the requirements of the boat and National Electrical Codes with

respect to equipment bonding and grounding. All permanently installed AC electrical equipment have the shells or cases bonded to the boat "earth" ground in order to prevent shocks which might occur due to internal faulting of the electrical device. If the internal fault is of great enough magnitude, the bonding connection will allow for the fault current to cause the supply breaker on the AC Locker Panels to trip and shut off the power.

WARNING: IF A CIRCUIT BREAKER TRIPS, IMMEDIATELY DISCONTINUE USE OF THE DEVICE AND LEAVE THE CIRCUIT BREAKER IN THE TRIPPED (OUTWARD) POSITION. CONTACT A SERVICE MAN OR YOUR CHRIS*CRAFT DEALER FOR REPAIR.

If portable AC electrical equipment is used aboard the boat, it must have the grounding type of electrical plug or else be of the "Double Insulated" design. Tripping of a circuit breaker on the outlet being used by the portable device could indicate internal faulting of the device. Discontinue use of the portable device until it can be checked by competent service personnel. Reset the circuit breaker and check for satisfactory operation.

All switches on board the boat are rated for AC and DC operation and are Underwriters' Laboratories approved for the loads that are connected to the switches. Any additions by the owner should not exceed the ratings of the switches.

Any additions to the AC Electrical System after delivery from Chris*Craft Corporation should conform to the latest issue of the ABYC and National Electrical Code requirements in order to maintain the proper operation and safety of the electrical system.

A. Alcohol/Electric Stove - The electric stove installed in the galley has the conventional type of electric burner as well as an alcohol burner to be used when not hooked to shore power.

B. Refrigerator - Refer to the manufacturer's operating instructions.

C. Freezer - Refer to the manufacturer's operating instructions.

D. Air Conditioners - The air conditioner option, if installed, provides a salon unit that serves the main salon area. Consult the manufacturers instruction booklet for specific information.

LET	ALTERATION	DATE	BY	APPV'D

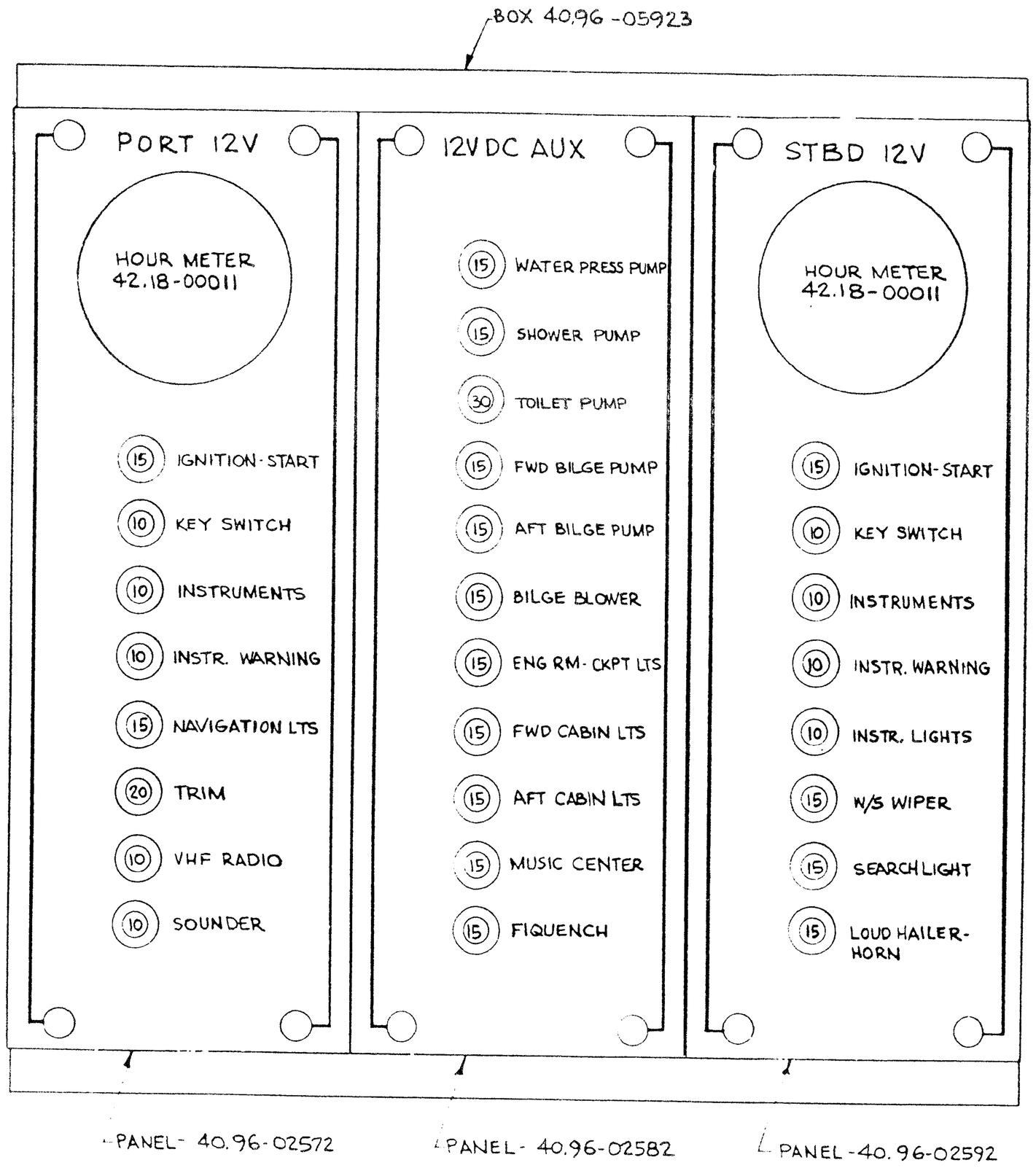

D.C. ELECTRICAL LOCKER
(ILLUS. #5)

CIRCUIT BREAKERS IN PORT & STBD PANELS - #252-401-(AMPS)
CIRCUIT BREAKERS IN 12VDC AUX. PANEL - #752-401-(AMPS)
WIRING DIAGRAM - 29.00-22934.

ITEM	IBM NO.	DESCRIPTION	QTY

BILL OF MATERIAL

HULL NO. MFA30
SERIES SMALL MODULAR ELECTRICAL SYSTEM
DC ELECTRICAL LOCKER - 3 PANEL
CHRIS-CRAFT CORPORATION
POMPANO BEACH, FLORIDA
DRAWN BY LE TOHIC MATERIAL NOTED DATE 2-25-75
CHECKED L SCALE FULL
APPROVED NO. 40.97-05963

LET	ALTERATION	DATE	BY	APPV'D
A	RANGE BREAKER WAS 15 AMP. W.O. WAS .07713	4-17-75	HPL	

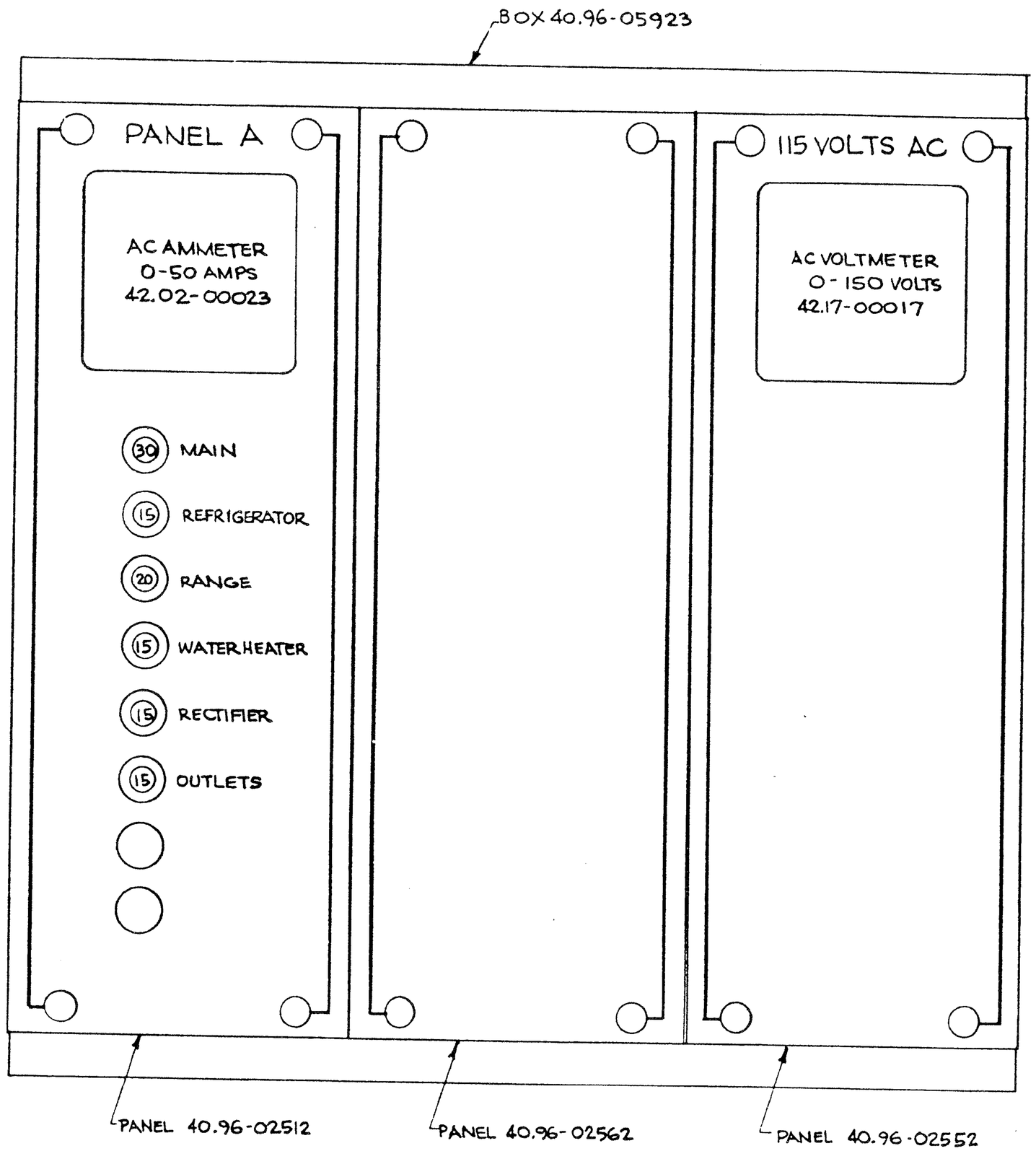

A.C. ELECTRICAL LOCKER
(ILLUS. #6)

ALL CIRCUIT BREAKERS ARE MINITEC #752-401-(AMPS)
HOLES WITHOUT CIRCUIT BREAKERS TO HAVE PLUGS.
WIRING DIAGRAM - 29.00-07623.

ITEM	IBM NO.	DESCRIPTION	QTY

BILL OF MATERIAL

HULL NO. SMALL MODULAR ELECTRICAL SYSTEM
SERIES W/O GENERATOR, AIR CONDITIONING OR 12VDC AUX.

AC ELECTRICAL LOCKER - PACKAGE E

CHRIS-CRAFT CORPORATION
POMPANO BEACH, FLORIDA

DRAWN BY L. TOHIC MATERIAL _____ DATE 4-9-75
CHECKED _____ SCALE _____
APPROVED _____ NO. 40.97-06113

AIR CONDITIONING SYSTEM
(BASIC WIRING)
(ILLUS. #7)

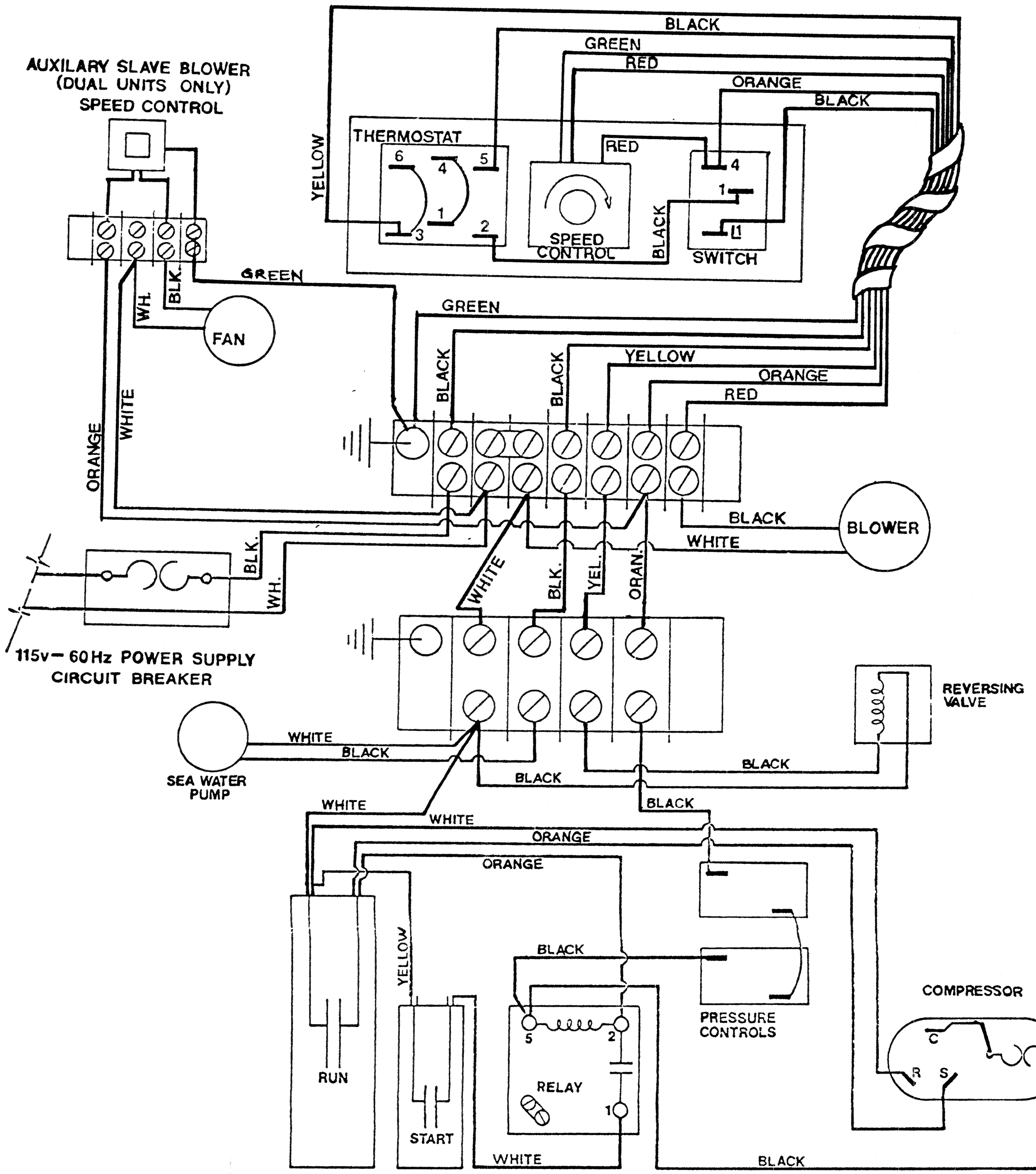

LET	ALTERATION	DATE	BY	APPV'D

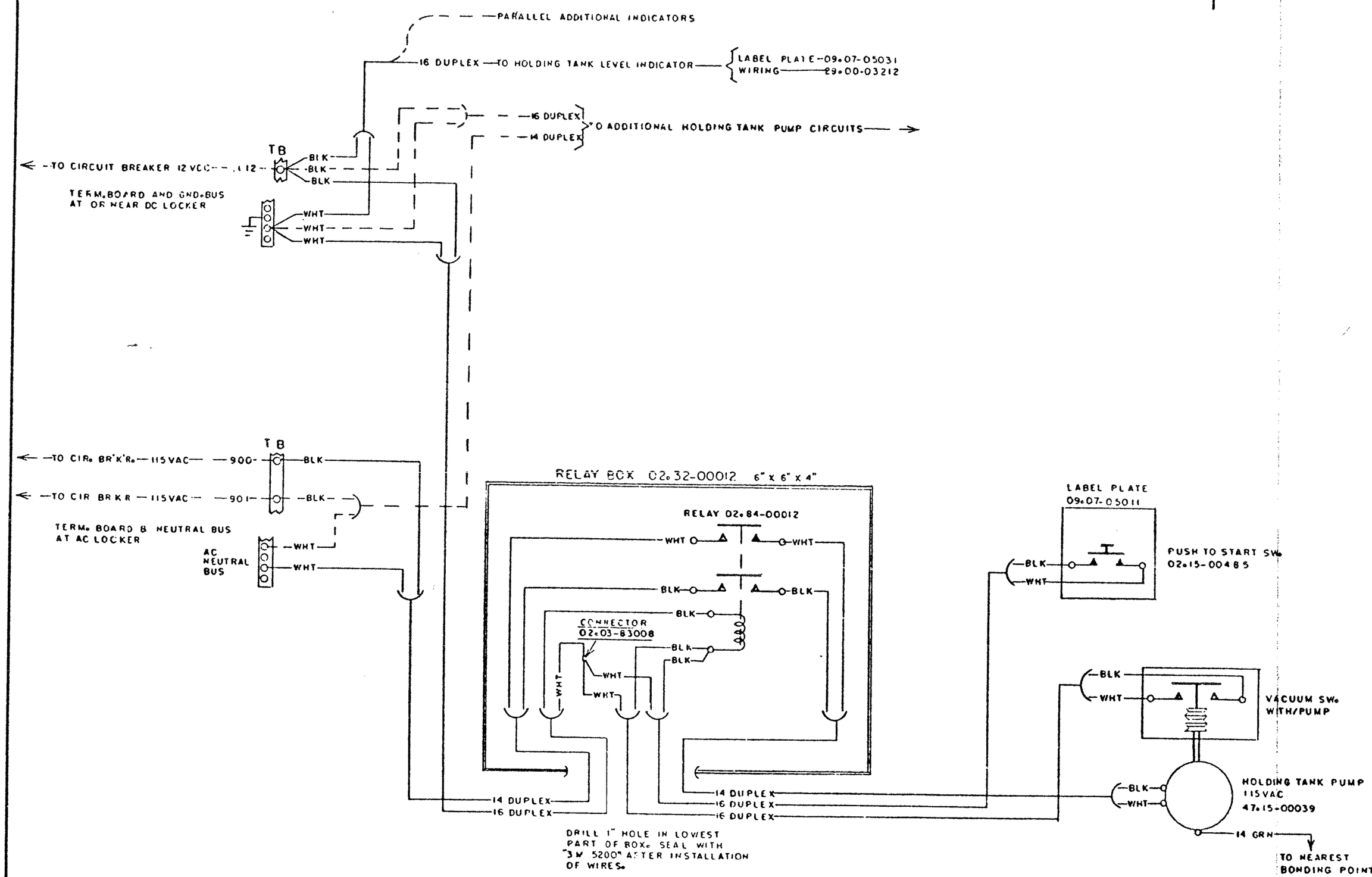

ITEM	IBM NO.	DESCRIPTION	QTY

BILL OF MATERIAL

HULL NO. HOLDING TANK PUMP

SERIES 115VAC PUMP—12VDC CONTROL

CHRIS-CRAFT CORPORATION
POMPANO BEACH, FLORIDA

DRAWN BY P.B. MATERIAL _____ DATE 3-24-75

CHECKED _____ SCALE NONE

APPROVED _____ NO. 29.00-07693

WIRING - HOLDING TANK PUMP

LET	ALTERATION	DATE	BY	APP'V'D

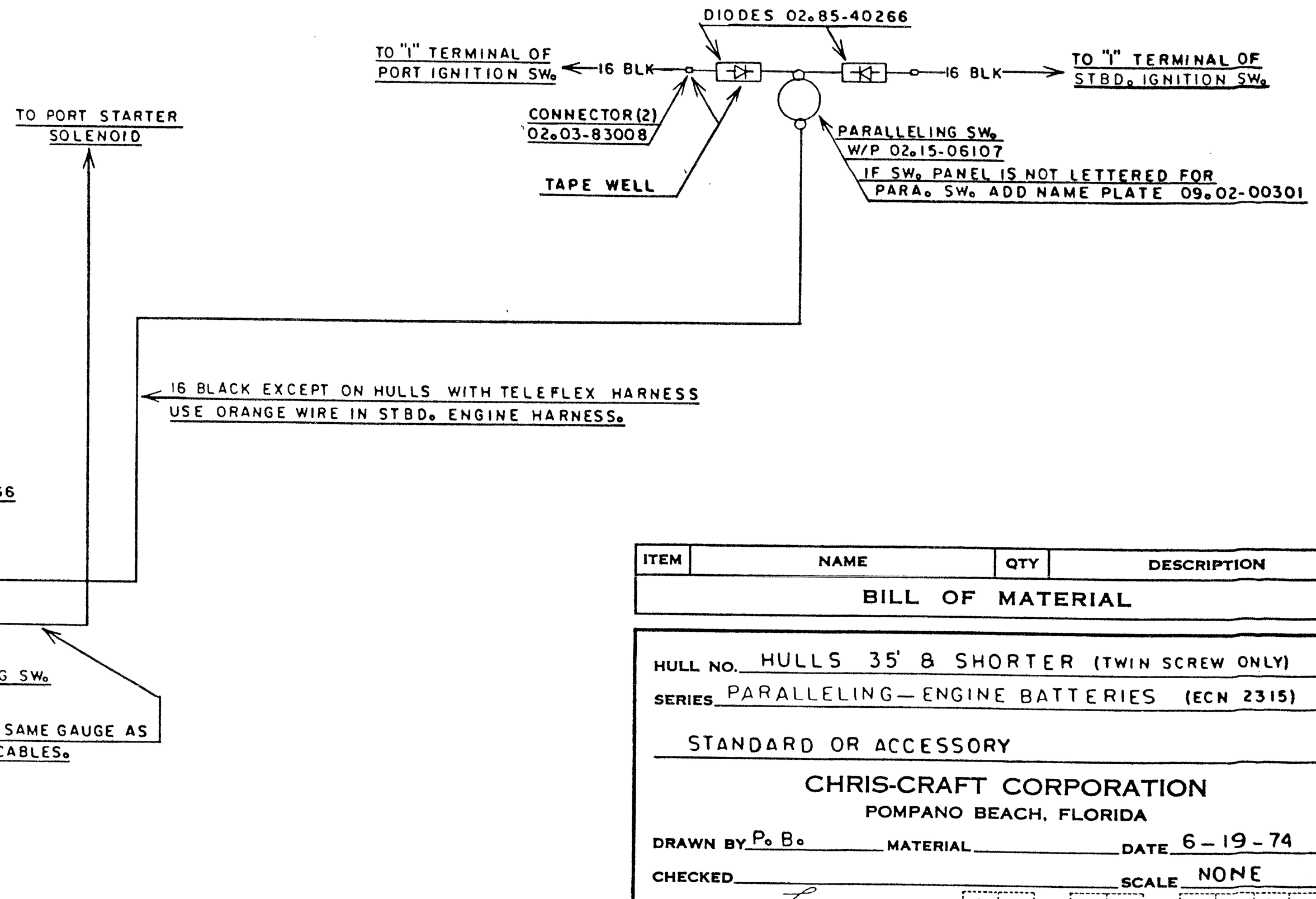

ITEM	NAME	QTY	DESCRIPTION

BILL OF MATERIAL

HULL NO. HULLS 35' & SHORTER (TWIN SCREW ONLY)

SERIES PARALLELING—ENGINE BATTERIES (ECN 2315)

STANDARD OR ACCESSORY

CHRIS-CRAFT CORPORATION
POMPANO BEACH, FLORIDA

DRAWN BY P. B. MATERIAL _____ DATE 6-19-74

CHECKED _____ SCALE NONE

APPROVED _____ NO. 29.00-03092

LET	ALTERATION	DATE	BY	APP'D
A	ADDED ALTERNATE TO ITEM 3	12-4-75	HPL	

ITEM	IBM NO.	DESCRIPTION	QTY
10	03.11-01005	SCREW, MACHINE-RHB-NP-6-32×3/8	6
9	03.40-00007	NUT, HEX - BRASS - 10-24	4
8	03.10-01056	SCREW, MACHINE - FHP-NP 10-24×5/8	4
7	02.91-01186	DIODE - 1N1186RA	1
6	50.90-00075	ARRESTER, LIGHTNING-GEN ELEC-9L15-TC	1
5	02.47-00016	SHIELD, PROTECTIVE-HEINEMANN-006-[illegible]	1
4	02.50-30250	BREAKER, CIRCUIT-HEINEMANN-AM[illegible]	1
3	02.63-06061	RECEPTACLE, INLET-HUBBELL 60CM61	1
2	40.97-05993	BOX & PANEL ASSY	1
1	—	ASSEMBLY	1

BILL OF MATERIAL

HULL NO.

SERIES

30 AMP INLET RECEPTACLE ASS'Y

CHRIS-CRAFT CORPORATION
POMPANO BEACH, FLORIDA

DRAWN BY LeTohic MATERIAL NOTED DATE 5-6-75
CHECKED
APPROVED
SCALE FULL
NO. 40.97-06003

SEE NOTE 1 FOR ALTERNATE -

NOTES:
1. ALTERNATE INLET RECEPTACLE PART NUMBER - 02.63-07000 - MFD. BY MARINCO P/N # 301CRI.

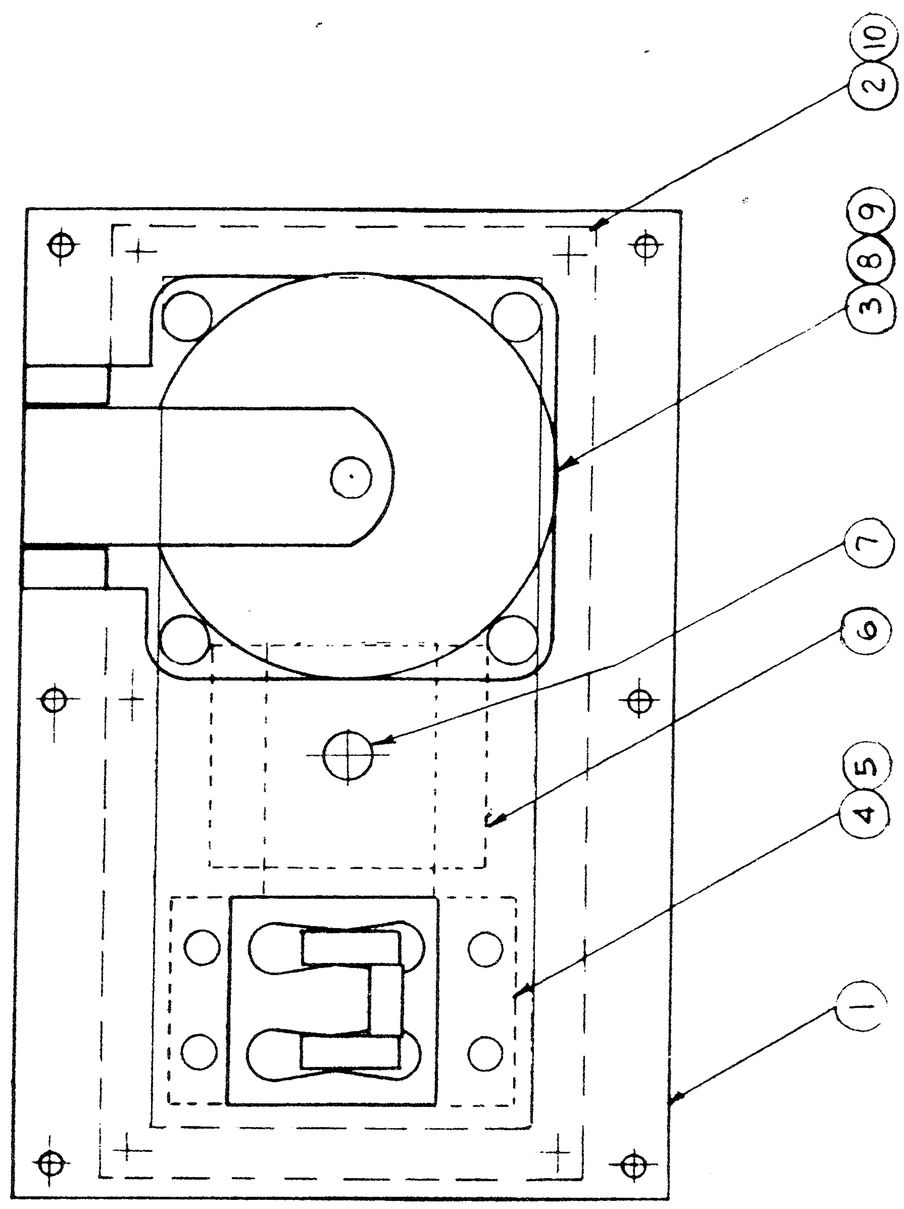

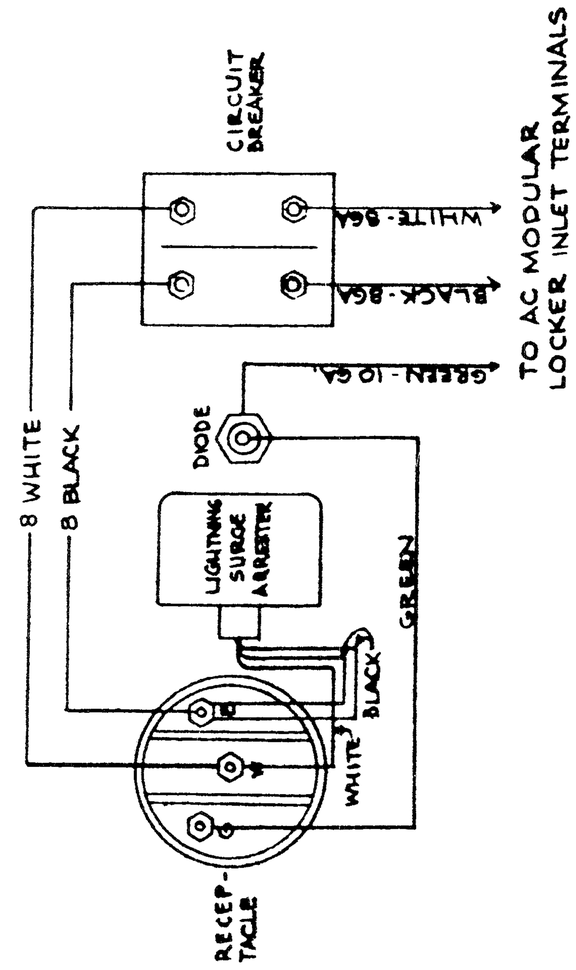

WIRING DIAGRAM

WIRING - 30 AMP. INLET RECEPTACLE ASS'Y
(DWG. #40.97.06003)

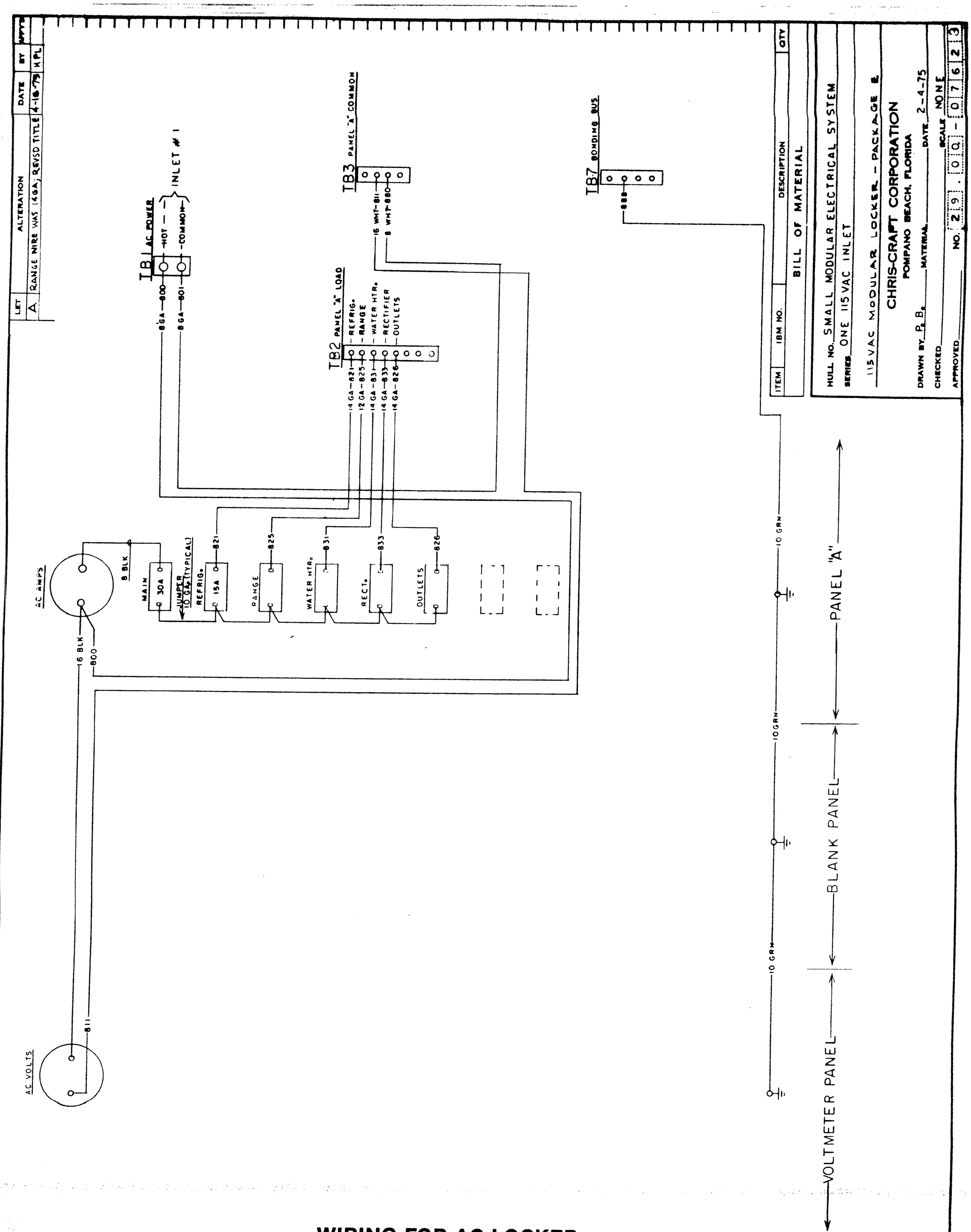

WIRING FOR AC LOCKER
(#29.00-07623)

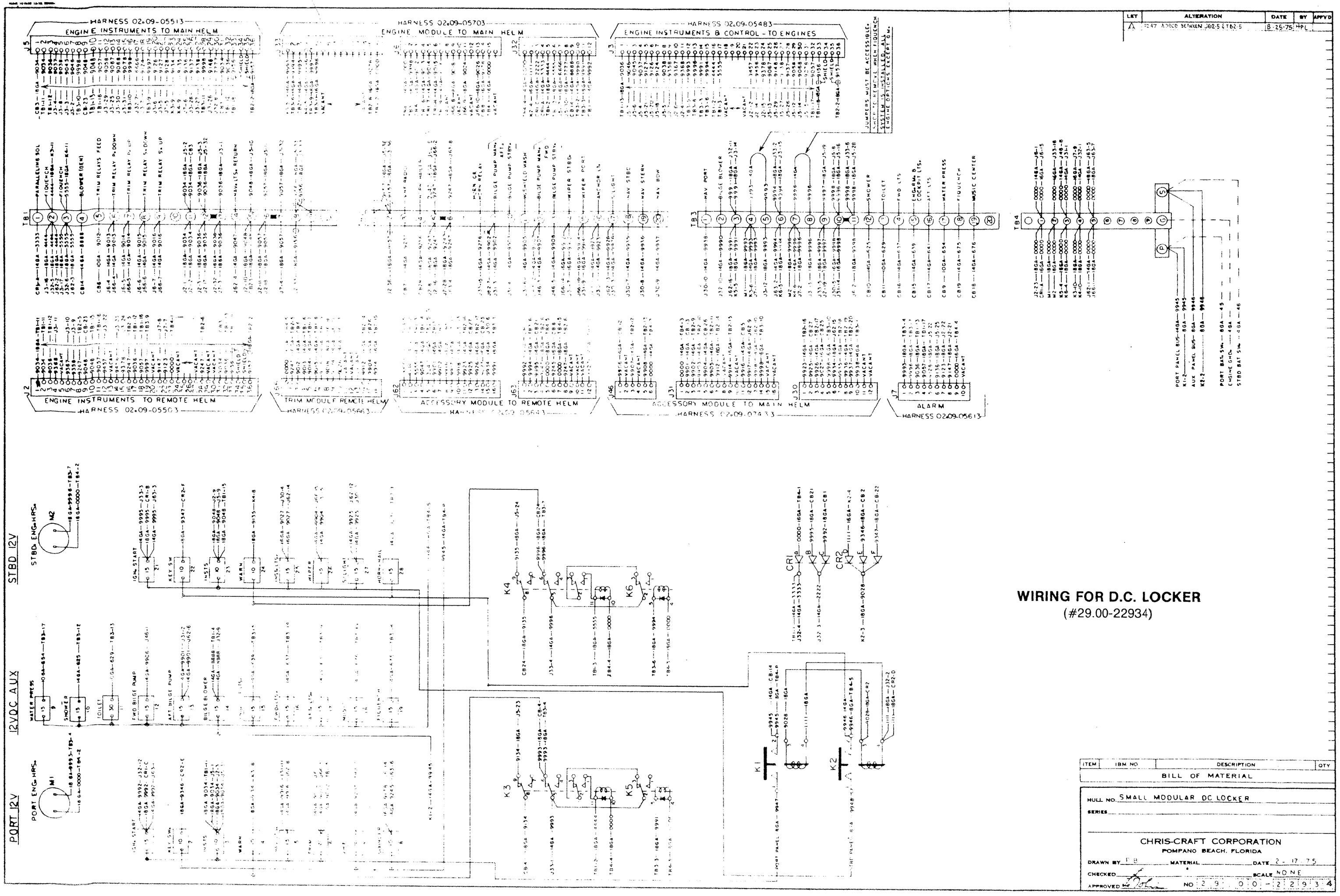

LET	ALTERATION	DATE	BY	APPV'D
A	9947 ADDED BETWEEN J62-5 & TB2-5	8-25-75	HPL	